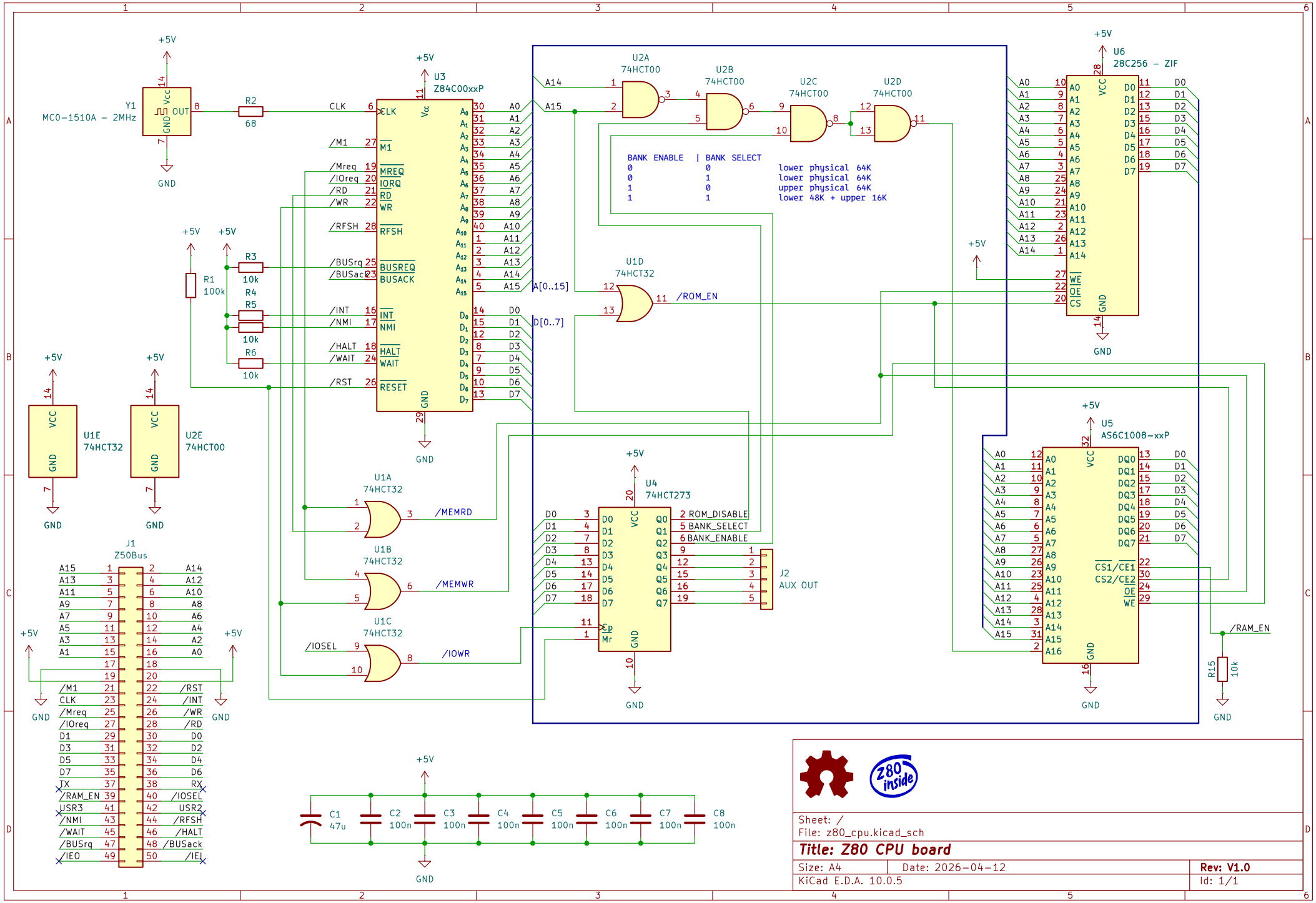
Y1
MC0-1510A - 2MHz
R2
68
U3
Z84C00xxP
U2A
74HCT00
U2B
74HCT00
U2C
74HCT00
U2D
74HCT00
U6
28C256 - ZIF
BANK ENABLE | BANK SELECT
0 0 lower physical 64K
0 1 lower physical 64K
1 0 upper physical 64K
1 1 lower 48K + upper 16K
U1D
74HCT32
/ROM_EN
A[0..15]
D[0..7]
R3
10k
R4
10k
R5
10k
R6
10k
R1
100k
U1E
74HCT32
U2E
74HCT00
U1A
74HCT32
/MEMRD
U1B
74HCT32
/MEMWR
U1C
74HCT32
/IOSEL
/IOWR
U4
74HCT273
ROM_DISABLE
BANK_SELECT
BANK_ENABLE
J2
AUX OUT
U5
AS6C1008-xxP
/RAM_EN
R15
10k
J1
Z50Bus
C1
47u
C2
100n
C3
100n
C4
100n
C5
100n
C6
100n
C7
100n
C8
100n
+5V
GND
Sheet: /
File: z80_cpu.kicad_sch
Title: Z80 CPU board
Size: A4
Date: 2026-04-12
Rev: V1.0
KiCad E.D.A. 10.0.5
Id: 1/1